G701A

Lightweight CherryMAX® Power Tool

MANUAL

CHERRY®
AEROSPACE

1224 East Warner Ave,
Santa Ana, CA 92705
Tel: 1-714-545-5511
Fax: 1-714-850-6093
www.cherryaerospace.com

TABLE OF CONTENTS

DESCRIPTION

The Cherry G701A is a pneumatic-hydraulic tool designed specifically for the most efficient installation of CherryMAX rivets. It weighs just over 3 1/2 lbs. and can be operated in any position with one hand. It has a .492" rivet setting stroke and a rated pull load of 1614 pounds with 90 psi air pressure at the air inlet.

The G701A riveter operates on a wide range of air pressure, with 90 to 120 psi providing the maximum efficiency. At 90 lbs. air pressure, the G701A does not exceed 85db (A) and consumes 1.9 cfm at 20 cycles per minute.

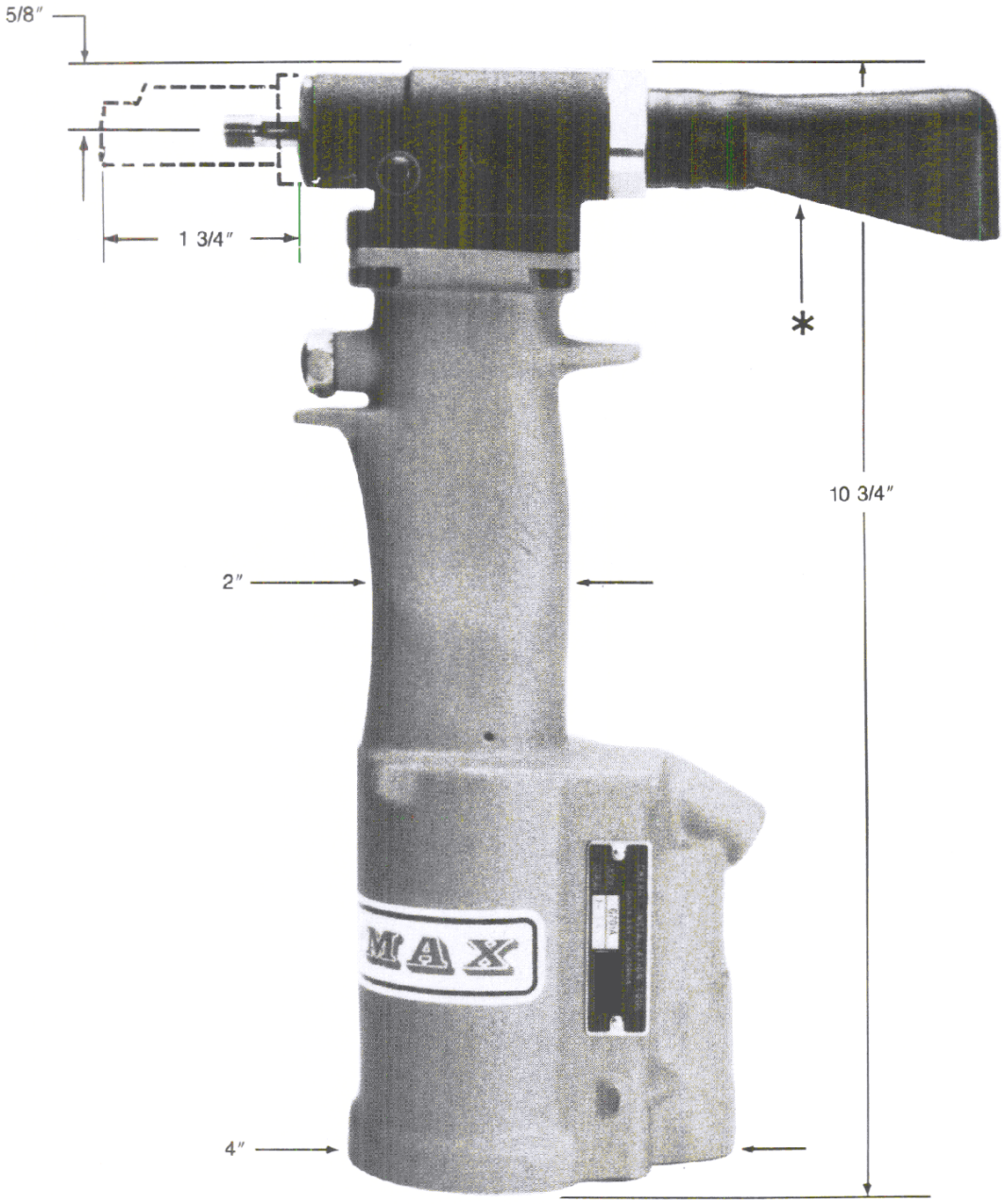

SAFETY WARNINGS

- Operating this tool with a damaged or missing stem deflector, or using the deflector as a handle, may result in severe personal injury. The pin deflector should be rotated until the aperture is facing away from the operator and other persons working in the vicinity.
- Approved eye protection should be worn when operating, repairing, or overhauling this tool.
- Do not use beyond the design intent.
- Do not use substitute components for repair.
- Any modification to the tool, pulling heads, accessories or any component supplied by CHERRY®, or their representatives, shall be the customer's entire responsibility.
  CHERRY® will be pleased to advise on any proposed modification.
- The tool must be maintained in a safe working condition at all times and examined at regular intervals for damage.
- Before disassembling the tool for repair, refer to the maintenance instructions. All repairs shall be undertaken only by personnel trained in CHERRY/Cherry installation tools.
  Contact CHERRY® with your training requirement.
- Always disconnect the air line from the tool inlet before attempting to service, adjust, fit or remove any accessory.
- Do not operate the tool when it is directed at any person.
- Ensure that the vent holes do not become blocked or covered and that air line hoses are always in good condition.
- Excessive contact with the hydraulic oil should be avoided to minimize the possibility of rashes. Care should be taken to wash thoroughly.
- Operating air pressure should not exceed 110 psi (7.6 bar).
- Do not operate the tool without the pulling head in place.
- Do not operate the tool unless the handle base (25) is fully secured by the retaining rings (26) and (28) and base cover (27).
- All retaining rings, screwed end caps, air fittings, trigger valves and pulling heads should be attached securely and examined at the end of each working shift.
- Do not pull rivet in the air.
- The precautions to be used when using this tool must be explained by the customer to all operators.
  Any questions regarding the correct operation of the tool and operator safety should be directed to CHERRY.
- Do not pound on the rear of the tool head to force rivets into holes as this will damage the tool.
- Do not depress the trigger while disconnecting the air bleeder and replacing the cap screw when bleeding the tool.

HOW TO USE THE RIVETER

After selecting the proper pulling head and attaching it securely to the riveter, connect the tool to an air line. Recommended air pressure is between 90 and 110 psi. Insert the rivet stem into the pulling head until the head of the rivet is in contact with the nosepiece. This will ensure full engagement between the jaws and the rivet stem and preventing slippage.

Insert the rivet into the application and depress the trigger to activate the tool. Upon the release of the trigger, the stem will eject to the rear of the tool when straight, pulling heads with no side eject feature are used. Other pulling heads (offset, right angle) will either captivate the stem or allow stem removal through the front only. See the appropriate tooling sheet for the selected pulling head.

If unclear, contact a CHERRY® representative.

MAINTENANCE AND REPAIR

The G701A has been manufactured to give maximum service with minimum care. In order that this may be accomplished, the following recommendations should be followed:

1. The hydraulic system should be full of oil and free from air at all times.
2. Keep excessive moisture and dirt out of air supply to prevent wear of air valve, air cylinder and air piston.
3. Tool should be routinely inspected for oil leaks.

Use automatic transmission fluid Type “A” (no substitutes). CHERRY® recommends using Dexron® III ATF.

DEXRON III OIL SAFETY DATA

FIRST AID

Skin: Wash thoroughly with soap and water as soon as possible. Casual contact requires no immediate attention. If irritation develops, consult a physician.

Ingestion: Seek medical attention immediately. DO NOT INDUCE VOMITING.

Eyes: Flush with copious amounts of water. If irritation develops, consult a physician.

Inhalation: No significant adverse health effects are expected to occur on short term exposure. Remove from contaminated area. Apply artificial respiration if needed. If unconscious, consult physician.

FIRE

Suitable extinguishing media: CO_2, dry powder, foam or water fog. DO NOT use water jets.

ENVIRONMENT

Waste Disposal: In accordance with local, state and federal regulations.

Spillage: Prevent entry into drains, sewers and water courses. Soak up with diatomaceous earth or other inert material. Store the spent fluid in appropriate containers for disposal.

HANDLING

Eye protection required. Protective gloves recommended. Chemically resistant boots and apron recommended. Use in well ventilated area.

COMBUSTIBILITY

It is slightly combustible when heated above flash point. It will release flammable vapors which can burn in open or be explosive in confined spaces if exposed to source of ignition.

STORAGE

Avoid storage near open flame or other sources of ignition.

PROPERTIES

Specific gravity	0.863
Weight per gallon	7.18 lbs.
Open flash point	>200°C (392°F)

FILL AND BLEED INSTRUCTIONS

To replace a small amount of ATF in the tool, connect tool to air line, remove cap screw (2) , being sure NOT to cycle tool. Attach Cherry air bleeder, 700A77, as shown above and cycle a number of times. This will insure the removal of any air from the hydraulic system and its replacement with fluid.

Should it become necessary to completely refill the tool (such as would be required after tool has been dismantled and reassembled), take the following steps:

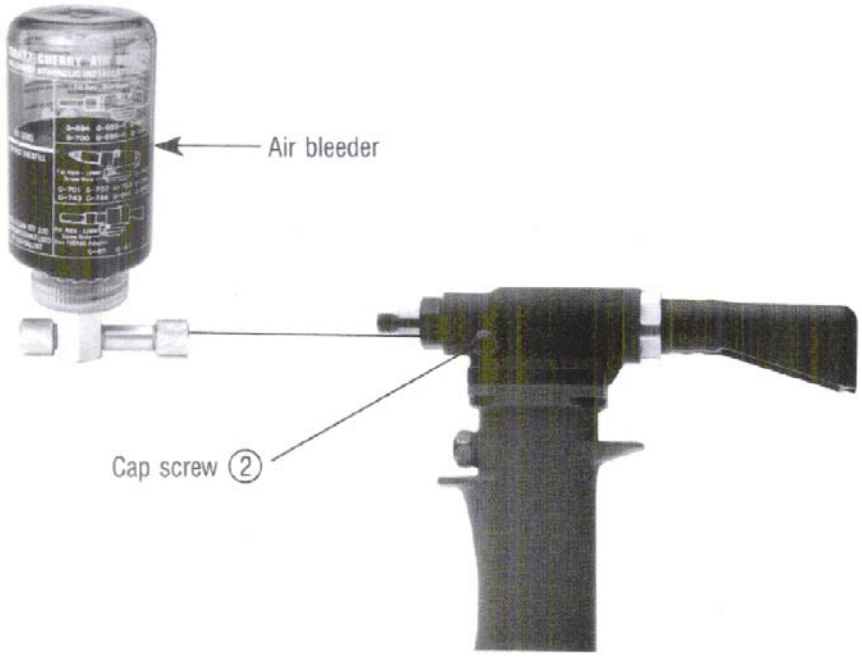

1. Remove head assembly from handle assembly.

2 .Fill handle assembly with ATF to within 1/8" of the top of the handle casting.

3. Replace head assembly, being sure gasket (28) and 0-ring (27) are properly in place. Tighten cap screws (31) uniformly to prevent leakage around gasket.

4. Connect tool to air line and cycle ten times to fully circulate fluid through the hydraulic system.

5. With tool connected to air line, remove cap screw (2), being sure NOT to cycle tool. Attach Cherry air bleeder, 700A77, and purge system of air by cycling the tool until it is free of air bubbles.

Do NOT depress trigger while disconnecting the Air Bleeder and replacing the cap screw (2). Extra fluid in the tool can cause severe damage.

TROUBLESHOOTING

1. Check air line for correct pressure at the tool. It must be 90 to 120 psi.

2. Check the tool for lack of ATF (see Fill & Bleed Instructions).

3. Check for ATF leakage.
   a. ATF leaking around the cap screw (2) in the head indicates that the screw is loose or the washer gasket (3) needs replacing.
   b. If ATF should leak through the by-pass hole at the base of the handle (32) the 0-rings (16) are worn or damaged.
   c. ATF leaking from the front of the head (1) indicates that 0-rings (4) are worn or damaged.

4. Check for excessive air leakage from air valve.
   a. If spring (41) is broken or dislodged, air will bleed directly through the bottom of the air valve and the head piston retreats to its full stroke without returning.
   b. If 0-ring (43) on plug (44) is worn or damaged, replace.
   c. If 0-rings (37) on valve spool (42) are worn or damaged, replace.

5. Check movement of piston (6). If it does not move freely or is slow in operation:
   a. 0-rings (4), (7) or (9) may be damaged and require replacement.
   b. Piston 0 may be mechanically locked due to damaged parts.
   c. Power piston may be held off its seat on rod (38) allowing ATF to bypass. Drain tool, flush thoroughly and refill with fresh fluid.
   d. Muffler (45) or air filter inside spool (42) may be plugged with dirt. Clean them thoroughly with normal solvent and back-blow with compressed air.
   e. Hole in metering screw in valve spool (42) may be blocked or damaged. Hole diameter should be .028". Clear and size or replace valve spool.

6. Rivet stem sticks in pulling head.
   a. Pulling head components need maintenance. Disassemble pulling head, clean and replace worn parts.
   b. Spent rivet stems are wedged side by side in pulling head from failure to eject stem from tool prior to inserting next rivet. Disassemble pulling head, remove stems and reassemble.

OVERHAUL

The disassembly and re-assembly procedures can be accomplished by following the instructions below and the drawings on pages 8 & 10. **Use extreme care during disassembly and re-assembly not to mar, nick or burr any smooth surface that comes in contact with O-rings.** Before installing O-rings, be sure to apply an O-ring lubricant. It is recommended that special assembly tools, which can be ordered under part number **G701/G704KT,** be used to overhaul this tool. Service kit, **G747KS,** which contains a complete set of O-rings, back-up rings, screws, washers and gaskets should be ordered.

Not shown, but included: *701A67 Seal Guide, 702B62 Power Cylinder Tool, 703A53 Seal Guide, and 702A64 Seal Guide.*

G701/G704KT TOOL KIT

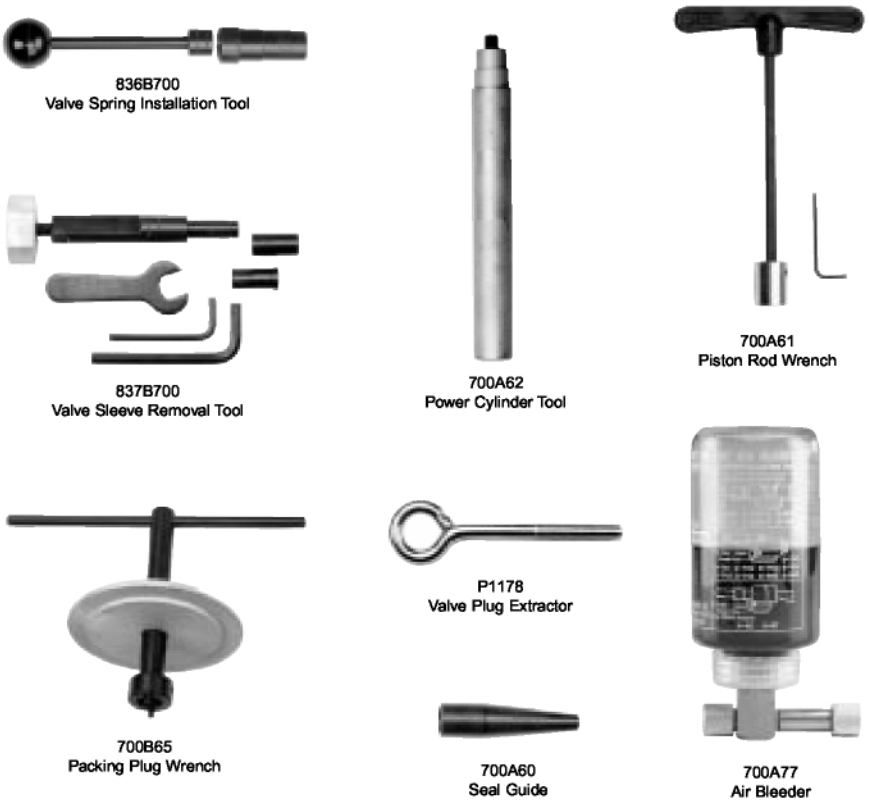

AIR VALVE

- Remove retaining ring (46) and muffler (45). Insert a valve plug extractor (P1178) into end of valve plug (44) and pull it out. Using the same procedures, pull out valve spool sub-assembly (42).
- Use needle nose pliers to grasp the end of the spring (41), turn clockwise and pull out to dislodge from groove in handle.
- With spring removed, valve sleeve (40) can be pulled out using the valve sleeve removal tool (837B700).

To re-assemble, reverse the above procedures, being certain that all O-rings are properly lubricated. To avoid damaging the O-rings, carefully install sleeve (40) with your finger. Gently push and wiggle sleeve to allow O-rings to slip past inner ports. Spring (41) is best installed using a valve spring installation tool (836B700) to push the large diameter coil into the groove. This requires care as the tool will not operate if the spring is not anchored firmly.

HEAD SUB-ASSEMBLY

- Disconnect the air supply and remove the complete pulling head from the tool before attempting to disassemble the head assembly.
- Remove the four socket head cap screws (50). Lift head assembly from the handle (31). Remove O-ring (48) and gasket (49). Empty the oil into a container by pouring from the handle. Dispose of the oil according to environmental regulations.
- Remove end cap (9). Push against threaded end of head piston (4) and slide it out of head cylinder (1). Be careful not to damage threads or cause burrs on polished head piston rod surface.
- O-rings (2) and back-up ring (3) can now be removed using a bent hook. O-ring (7) can be removed in the same manner.
- Upon re-assembly, be sure to install O-rings and back-up rings carefully to avoid cutting them. Always lubricate all O-rings. Just prior to placing the head sub-assembly onto the handle, see Fill and Bleed Instructions. Also make sure to place O-ring (51) on top of the handle in its groove, and then the gasket (49) over the O-ring (48).
- Tighten the four socket head cap screws (50) uniformly to prevent leakage around the gasket.
- Purge system of air using Cherry air bleeder (700A77) according to Fill & Bleed Instructions.

HANDLE SUB-ASSEMBLY

- Disconnect tool from air supply and remove parts (23) through (26).
- Remove the head sub-assembly using the instructions in the head sub-assembly section.
- Place piston rod wrench (700A61) down into the top of the handle (31), into the hex socket in the head of the power piston rod (38). While holding this wrench, remove the locknut (22) using the 7/16" socket in packing plug wrench (700B65).
- Still holding the piston rod wrench, remove the air piston (21) using the packing plug wrench (700B65) by turning counterclockwise. When air piston is completely freed from the piston rod, tap or push on the piston rod wrench to eject the piston from bottom of handle.
- Slide power piston rod (38) back up to the end of its travel. Using the packing plug wrench (700B65), remove packing plug (19). It may be necessary to hold the handle upside down in a vise while removing the packing plug.
- Power cylinder (34) can be tapped out by lowering power cylinder tool (700A62) down into the top of the handle on to top of cylinder. The O-rings (16) and backup rings (17) are best removed and replaced by using a thin bent hook.

To re-assemble the handle, reverse the above procedure, being certain that all the O-rings are properly lubricated before installation. Attach the seal guide (700A60) to the piston rod (38) and with a mallet, tap the piston rod through the packing plug (19). When re-assembling, replace air piston, items (20) and (22), follow the instructions given below:

- Clamp piston rod wrench (700A61) in a vise with the hex shaft pointed up.
- Turn the handle upside down and place the hex end of the power piston rod (38) onto the wrench. Push handle casting down until it stops.
- Assemble seal (20) to air piston (21).
- Place the air piston (21) into handle bore. **IMPORTANT:** Be sure that the radial pattern embossed on the side of air piston is facing downward towards - the smooth side of the air piston is facing you.
- Thread the locknut (22) onto the power piston rod sub-assembly (38) and tighten between 50 in-lb (5,65 N-m) and 59 in-lb (6,67 N-m).

G701A PULLING HEADS

Pulling Heads are not furnished with riveter and must be ordered separately.

See the Tool Sheet for mounting, maintenance and operation instructions of particular pulling heads.

Note: Pulling heads are not furnished with this riveter and must be ordered separately.

The straight, H701B-456, right angle, H753A-456, and the offset, H781-456 pulling heads fit directly on the G701A riveter to install CherryMax® rivets and CherryLock® 'A' code. Extensions are available for extending the pulling heads, to reach limited access areas. See CherryMax® rivet catalog for more information.

The G701A riveter, using the pulling heads listed above, will install CherryMax® Bulb rivets in 1/8", and 5/32". and 3/16" nominal and oversize diameters, in all head styles, grip lengths and materials. This riveter will also pull CherryLock® 'A' rivets in 1/8", and 5/32", and 3/16" diameters.

The G701A riveter, using the pulling heads listed above will also install CherryMax® 'A' (wiredraw) rivets in 1/8", 5/32", and 3/16" nominal diameters, in all head styles and materials, up to a -9 grip length.

Additionally, this riveter using the heads noted above will install All-Aluminum CherryMax® Bulb rivets in 1/8" and 5/32" oversize only diameters in all styles and grip lengths.

This riveter will install short grip, serrated stem MS-type rivets using either the H9015 (with the 704A9 adapter) or H9040 (with the 704A6 adapter) pulling heads.

CROSS SECTION OF G701A

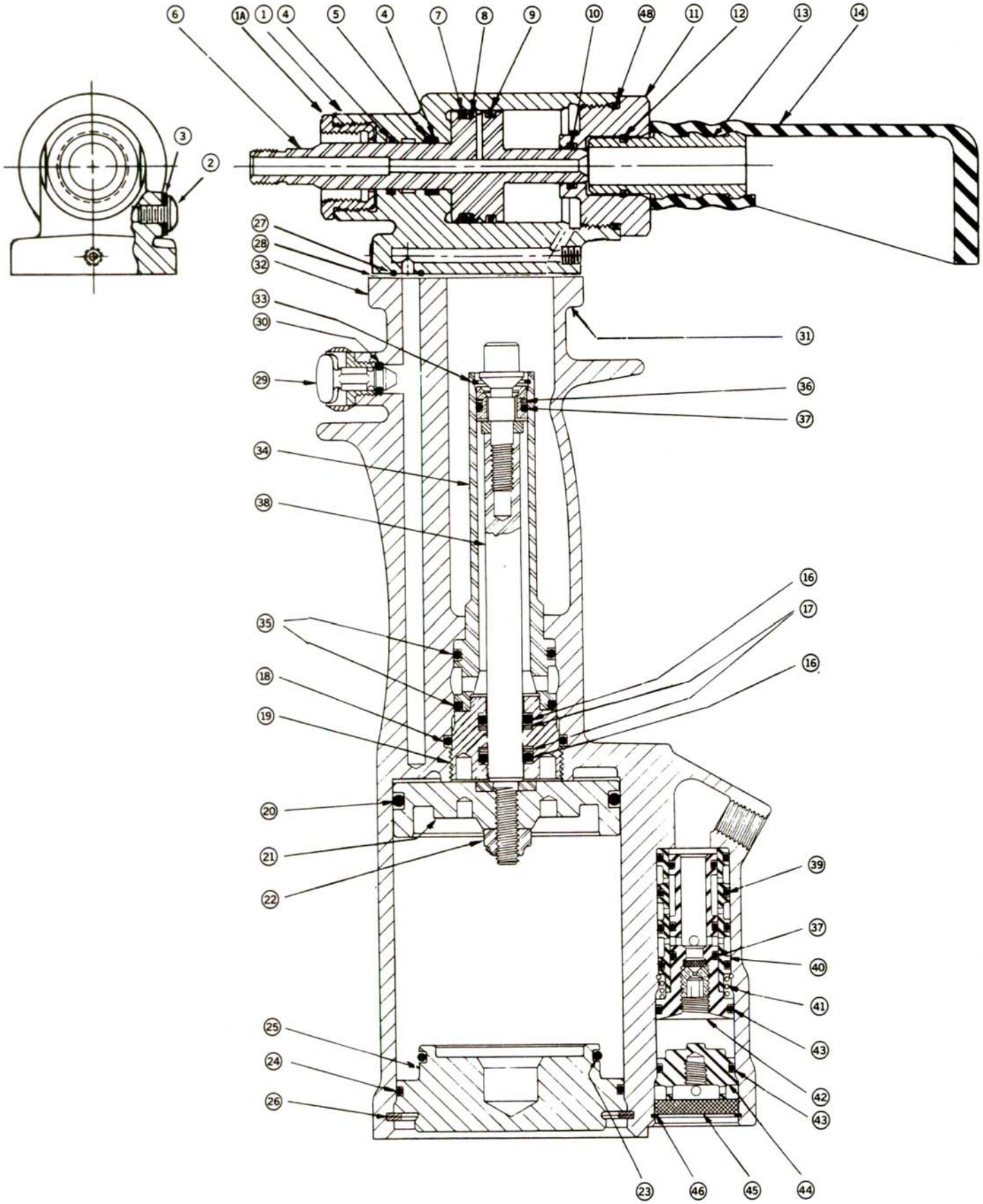

PART LIST FOR THE G701A CHERRYMAX RIVETER ASSEMBLY

REF. NO.	PART NUMBER	DESCRIPTION	QTY. REQ'D.
1	701B8	Head Cylinder (Includes 704B2-2 Ref. No. 1A)	1
1A	704B2-2	Nose Fitting	1
2	P573	Button Hd. Soc. Screw 10-32 x 1/4	1
3	P572	Stat-O-Seal Washer 600-001-10	1
4	P701	0-Ring, 1/16 x 1/2 x 5/8	2
5	P998	Back-Up Ring	1
**6	701C3	Head Piston	1
7	P304	Quad Ring, 6227-014	1
8	P999	Back-Up Ring	1
9	P848	0-Ring, 1/16 x 13/16 x 15/16	1
10	P112	0-Ring, 1/16 x 3/8 x 1/2	1
11	70184	Cap	1
12	P880	Retaining Ring	1
13	703A13	Deflector Fitting	1
14	530A16	Deflector	1
15	*670A20	Stem Catcher Bag	1
16	P838	0-Ring, Disogrin 6865-110 (No Subs.)	2
17	P115	Back-Up Ring, MS28782-8	2
18	P727	0-Ring, 3/32 x 1-1/8 x 1-5/16, 90 Shore	1
19	700B93	Packing Plug	1
20	P893	0-Ring, 1/8 x 2-1/8 x 2-3/8	1
21	702A6	Air Piston	1
22	P737	Conelok Nut, 1/4-20	1
23	P918	0-Ring, 3/32 x 1-3/8 x 1-9/16	1
24	P894	0-Ring, 1/16 x 2-1/8 x 2-1/4	1
25	702B4	Handle Base	1
26	P895	Retaining Ring, Spir-O-Lox RRT-243	1
27	P832	0-Ring, Disogrin 9250-010 (No Subs.)	1
28	702A22	Gasket	1
29	703A33	Trigger Assembly (Includes P223)	1
30	P223	0-Ring, 1/16 x 5/32 x 9/32	1
31	P27	Soc. Hd. Cap Screw, 8-32 x 1/2	4
32	702D3	Handle	1
33	P733	Retaining Ring, Spir-O-Lox RR-56	1
34	702B7	Power Cylinder	1
35	P833	0-Ring, Disogrin 9250-118 (No. Subs.)	2
36	P919	Back-Up Ring, MS28774-13 (Spec. ID .422)	1
37	P829	0-Ring. Disogrin 6865-012 (No Subs.)	5
38	702A8	Power Piston & Rod Assembly	1
39	P653	0-Ring, 1/16 x 9/16 x 11/16	4
40	700B96	Valve Sleeve	1
41	700A67	Spring	1
42	700A94	Valve Spool	1
43	P834	0-Ring, Disogrin 6865-017 (No Subs.)	2
44	700A16	Valve Plug	1
45	700A17	Muffler	1
46	P279	Retaining Ring, Spir-O-Lox RR-90	1
47	*P948	Air Hose	1
48	P244	0-Ring, 1/16 x 15/16 x 1-1/16	1
49	701B7	Head Assy (Includes 1 and 1A)	—

NOTE: Use Loctite No. 271 or equivalent when assembling items 1 and 1 A

*Not furnished with riveter. Must be ordered separately if desired.
**Complete head assembly, items 1 through 14 plus item 48 may be ordered as Part Number 70166.

EXPLODED VIEW OF G701A

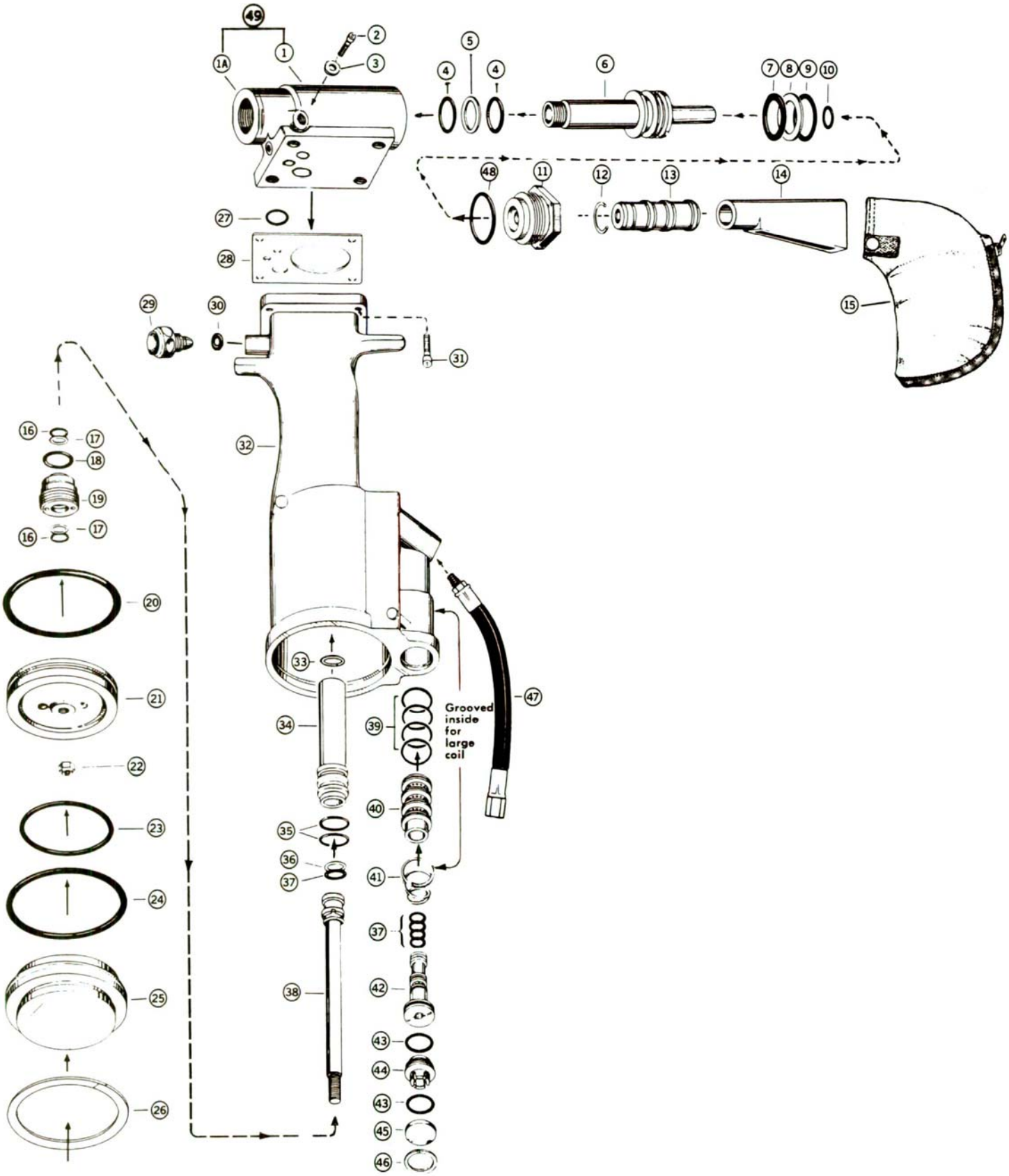

WARRANTY

Seller warrants the goods conform to applicable specifications and drawings and will be manufactured and inspected according to generally accepted practices of companies manufacturing industrial or aerospace fasteners. In the event of any breach of the foregoing warranty, Buyer's sole remedy shall be to return defective goods (after receiving authorization from Seller) for replacement or refund of the purchase price, at the Seller's option. Seller agrees to any freight costs in connection with the return of any defective goods, but any costs relating to removal of the defective or nonconforming goods or installation of replacement goods shall be Buyer's responsibility. SELLER'S WARRANTY DOES NOT APPLY WHEN ANY PHYSICAL OR CHEMICAL CHANGE IN THE FORM OF THE PRODUCT IS MADE BY BUYER.

THE FOREGOING EXPRESS WARRANTY AND REMEDY ARE EXCLUSIVE AND ARE IN LIEU OF ALL OTHER WARRANTIES AND REMEDIES; ANY IMPLIED WARRANTY AS TO QUALITY, FITNESS FOR PURPOSE, OR MERCHANTABILITY IS HEREBY SPECIFICALLY DISCLAIMED AND EXCLUDED BY SELLER. THIS WARRANTY IS VOID IF SELLER IS NOT NOTIFIED IN WRITING OF ANY REJECTION OF THE GOODS WITHIN ONE (1) YEAR AFTER INITIAL USE BY BUYER OF ANY POWER RIVETER OR NINETY (90) DAYS AFTER INITIAL USE OF ANY OTHER PRODUCT.

Seller shall not be liable under any circumstances for incidental, special or consequential damages arising in whole or in part from any breach by Seller, AND SUCH INCIDENTAL, SPECIAL, OR CONSEQUENTIAL DAMAGES ARE HEREBY EXPRESSLY EXCLUDED.

For more information please contact our Technical Services Department at Tel. 714-850-6022

CHERRY® AEROSPACE

1224 East Warner Ave,
Santa Ana, CA 92705
Tel: 1-714-545-5511
Fax: 1-714-850-6093
www.cherryaerospace.com

Supplier's Federal Identification Code: 11815

TM-G701A
Rev.: B
Date: 10/14/09
CR# 09-1326